M24Z2138MP-MP

24X 21mm-500mm F3.8
for 2/3 type Megapixel Cameras, Motorized Zoom
C-Mount

Model No.		M24Z2138MP-MP		Effective Lens Aperture	Front	φ66mm	
Focal Length		21mm - 500mm			Rear	φ14.5mm	
Max. Aperture Ratio		1:3.8		Back Focal Length		21.3mm	
Max. Image Circle		φ11mm		Flange Back Length		17.526mm	
Operation Range	Iris	F3.8 - F22C		Mount		C-Mount	
	Focus	5m - Inf.		Filter Size		M77 P=1mm	
	Zoom	21mm - 500mm		Tripod Screw		1/4 -20UNC	
Control	Iris	Motorized		Dimensions		W101mm x H102.4mm x D237.6mm	
	Focus	Motorized		Weight		2300g	
	Zoom	Motorized					
Angle of View	D	2/3 type	29.4° - 1.3°	1/1.8 type	23.6° - 1.0°	1/2 type	21.4° - 0.9°
	H		23.5° - 1.0°		18.9° - 0.8°		17.1° - 0.8°
	V		17.6° - 0.8°		14.2° - 0.6°		12.8° - 0.6°
		Iris		Focus		Zoom	
Supply Voltage		DC6V		DC6V		DC6V	
Current		90mA or less		90mA or less		90mA or less	
Response Time		Approx. 4.5 sec.		Approx. 6.5 sec.		Approx. 6.5 sec.	
Preset Potentiometer		———		5kΩVR		5kΩVR	
Operating Temperature		-10℃ - +50℃					

Dimensions

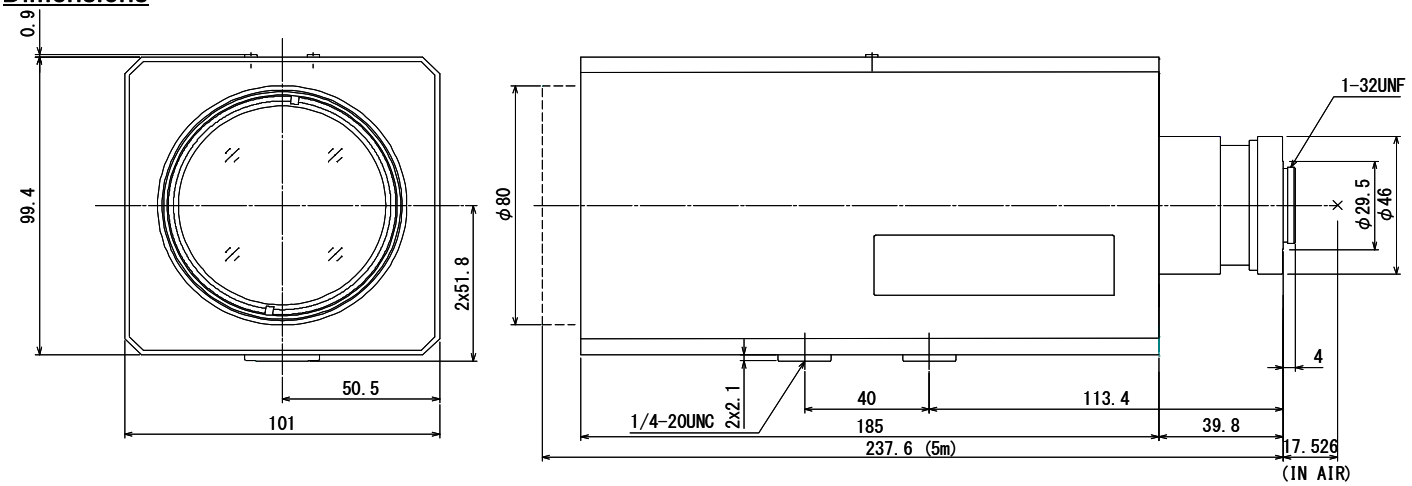

Wiring Diagram

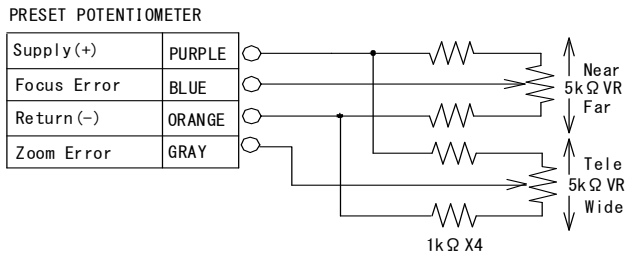

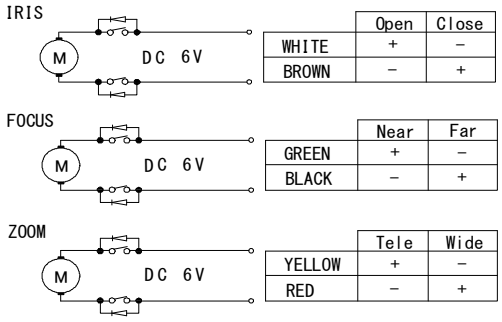

2016.03

Specification is subject to change without any notice.