This product may be sold or used in the following member states of the European Community:

Austria	Germany	Norway
Belgium	Greece	Portugal
Denmark	Holland	Spain
Finland	Ireland	Sweden
France	Italy	United Kingdom

CE 0678

ROSSLARE
SECURITY PRODUCTS
www.rosslaresecurity.com

0706-0960048-00

ROSSLARE
SECURITY PRODUCTS

INSTRUCTION MANUAL

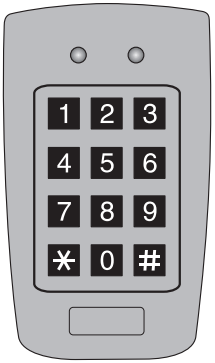

AC-F44

WATERPROOF STAND-ALONE ACCESS CONTROL UNIT WITH PROX & BACKLIT KEYPAD

InteliDoor
Smart Access Control

07/04

Contents

INTRODUCTION **4**
Technical Specifications 5
Key Features 6

INSTALLATION **8**
Mounting the AC-F44 Controller 8
Wiring Diagrams 10

FEATURES AND CONCEPTS
Normal, Secure, & Master Users 14
Modes Of Operation 15
Changing the Modes of Operation 16
Auxiliary Output and Input 17
Request To Exit (REX) Button 18
Case and Back Tamper 18
BL-D40 External Sounder 19

PROGRAMMING THE AC-F44 ..... **20**
Entering Programming Mode 21
Exiting Programming Mode 21
1 Changing the Open Code 22
2 Changing the Auxiliary Code 22
3 Changing the Programming Code 23
4 Changing the Normal / Secure Code 24
5 Changing the Normal / Bypass Code 24
Door Chime Settings 24
6 Setting Fail Safe / Secure Operation 26
Setting Tamper Siren Time 26
Setting the Lock Strike Release Time 26
Setting the Auxiliary Mode 27
Auxiliary Mode Quick Reference Table 28
Auxiliary Mode Reference Guide 29
7 Enrolling Primary and Secondary Codes 32
8 Deleting Primary and Secondary Codes 35
9 Lock Strike Relay and Auxiliary Relay Code Assignment 37
0 Return to Factory Default Settings 39

Replacing a lost Programming Code 40
Replacing a lost Normal / Secure Code 40

APPENDIX
Glossary 41

WARRANTY **44**

TECHNICAL SUPPORT **46**

Introduction

The AC-F44 is a waterproof proximity card and keypad access control unit with backlit keypad suitable for external or internal applications.

The unit accepts up to 500 users and provides entry via the use of proximity cards and/or PIN codes.

Equipment provided

The following is provided as part of every AC-F44 package:

- AC-F44 Access Control Unit.
- Installation Kit
- Installation and Operating Instructions

Additional Equipment Required

1) Electric Lock Strike Mechanism
Fail Safe (Power to Lock) or Fail Secure (Power to Open)

2) Power Supply with Backup Battery
12 to 24V DC (From a Regulated Power Supply)
or
16 to 24V AC (From a Transformer)

3) Request To Exit (REX) Button
Normally Open Type - Switch is closed when pressed.

4) BL-D40 External Sounder (Optional)
Provides Siren, Bell, and Chime functions to AC-F44

Other Rosslare accessories can be found at Rosslare's Web Site:

http://www.rosslaresecurity.com

Technical Specification

Electrical Characteristics

Operating Voltage Range:

12 to 24V DC	From a Regulated Power Supply
or	
16 to 24V AC	From a Transformer

Maximum Input Current:

Standby: 95mA	Not including attached devices
Max: 150mA	Not including attached devices

Relay Outputs:

Lock Strike Relay	Form C, 5A
Auxiliary Relay	Form C, 5A

Inputs:

REX	N.O., Dry Contact
Auxiliary Input (In / Monitor)	N.O., Dry Contact

LEDs
Two Tri-colored LEDs

Built-In Proximity Reader

Read Range*	2.5" (65mm)
Modulation	ASK at 125kHz
Compatible Cards	All 26-Bit EM Cards

Environmental Characteristics

Operating Temperature:	-22°F to 150°F (-30°C to 65°C)
Operating Humidity:	0 to 95% (Non-Condensing) Suitable for outdoor use. (IP 65)

Mechanical Characteristics

Dimensions:
4.72" (120mm) L x 2.80" (71mm) W x 1.17" (30mm) D

Weight:
0.54 lbs (244g)

* Measured using Rosslare Proximity Card (AT-14) or equivalent.
Range also depends on electrical environment and proximity to metal.

Key Features

Here are some of the AC-F44's key features:

- Waterproof
- Built in Proximity Card Reader (125 KHz ASK Modulation)
- Built in backlit keypad for PIN code entry
- Auxiliary Input & Auxiliary Output
- Ten Auxiliary Modes including:
  - Door Ajar
  - Forced Door
  - Shunt
  - Door Monitor
  - Normal / Secure
  - LED Control
- Internal Buzzer
- Comes with security screw and security screw tool
- Two Tri Color LED'S for Status / Programming Interface LED's
- Three User Levels
  - Normal User
  - Secure User
  - Master User
- Three Modes of Operation
  - Normal Mode
  - Bypass Mode
  - Secure Mode
- "Code Search" feature that helps make maintaining user codes easier.
- Input for Request to Exit (REX) button.
- Comes with mounting template for easier installation.
- Built in Case and Back Tamper
- Bell, Chime, Siren, and Strobe features available with BL-D40.
- Programmable Siren Time (with BL-D40)
- Programmable Lock Strike Release Time

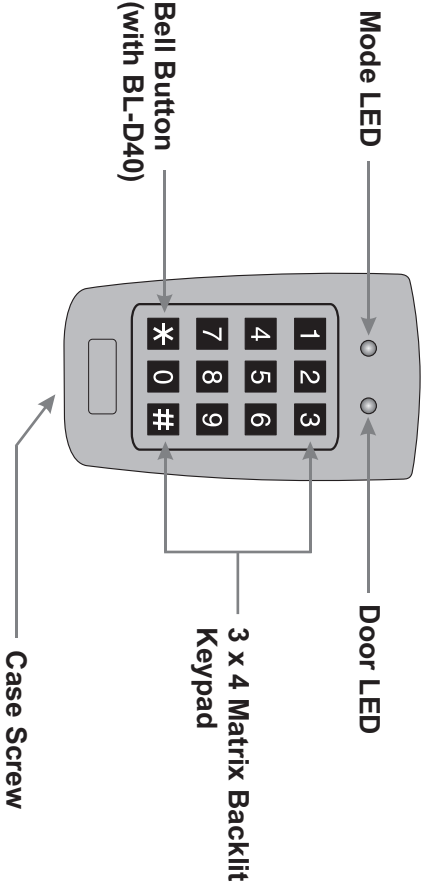

Installation

Mounting the AC-F44 Controller

1) Before starting, select the location to mount the AC-F44 controller.

2) For wall mounting use the mounting template as a guide to drill the mounting and cable holes in the wall. For US Gang Box installation there are two holes on the back cover aligned for the US Gang Box. (Shown marked as "A" in diagram below).

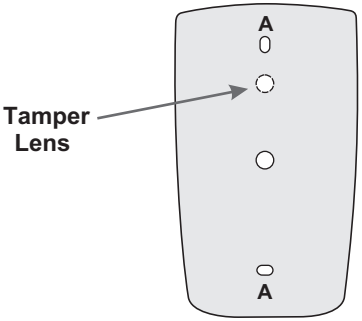

3) Screw the AC-F44 back cover to its mounting location.

4) Wire the controller according the wiring instructions of the following page.

5) Mount the AC-F44 to the back cover.

6) Secure the AC-F44 by using the supplied security screw in the Installation Kit. An L-Shaped tool is provided for use when tightening the security screw.

Wiring the AC-F44

The controller is supplied with a 22" (60cm) pigtail, having a 10 conductor cable. To wire the Controller, perform the following steps.

1) Prepare the controller cable to the required length.

2) Splice the controller pigtail wires to the corresponding devices and cover each connection. Refer to the wire color guide provided below and to the wiring diagrams provided on the following pages.

Wire Color Guide

COLOR	DESCRIPTION
RED	V INPUT
BLACK	GROUND
GREEN	REX / BL
WHITE	IN / MONITOR
PURPLE	LOCK: COM
GRAY	N.O.
BROWN	N.C.
BLUE	AUX: COM
YELLOW	N.O.
ORANGE	N.C.

3) Trim and cover all conductors that are not used.

A few of the typical wiring diagrams are shown on the next three pages; for other wiring diagram examples refer to the support section of the Rosslare Web Site.

http://www.rosslaresecurity.com

Wiring Diagrams

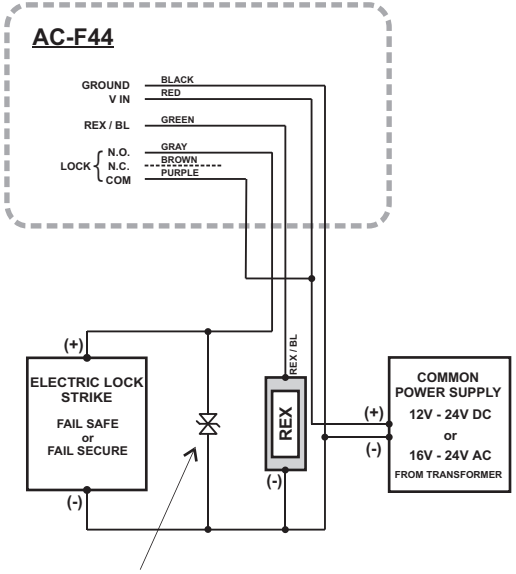

Wiring the Auxiliary Input and Output

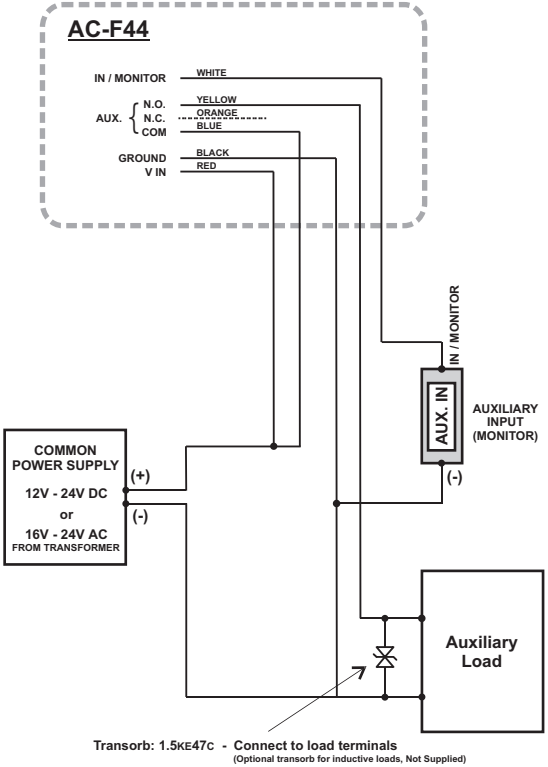

Wiring the BL-D40 External Sounder

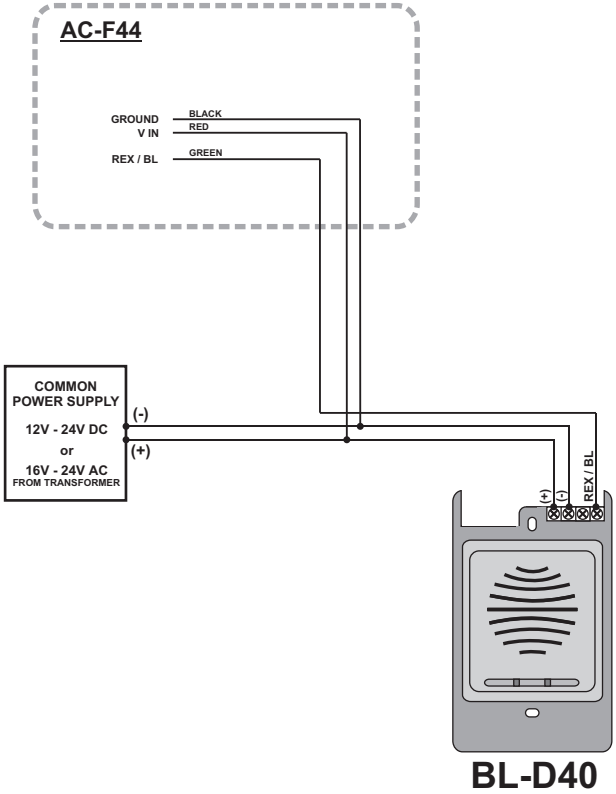

THIS PAGE IS INTENTIONALLY BLANK

Normal, Secure, & Master Users

The AC-F44 accepts up to 500 users and provides entry via the use of proximity cards and / or PIN codes. Each user is provided with two code memory slots, Memory Slot 1 (Primary Code) and Memory Slot 2 (Secondary Code). The two memory slots can be programmed as Proximity Cards, PIN codes, or a combination of both Proximity Cards and PIN codes.

The way in which the two memory slots are programmed determines a users access level and also determines the way in which the AC-F44 grants access in its three Modes of Operation.

There are three user levels:

Normal User

A Normal User only has a Primary Code and is only granted access when the AC-F44 is in Normal or Bypass Mode.

Secure User

A Secure User must have a Primary and Secondary Code programmed, the two codes must not be the same. The Secure User can gain access when the AC-F44 is in any of its three Modes of Operation. In Normal Mode the Secure User must use their Primary Code to gain entry. In Secure Mode the Secure User must first present their Primary Code and then their Secondary Code in order to gain entry.

Master User

A Master User must have both Primary and Secondary Codes programmed with the same Proximity Card or PIN code. The Master User can gain access during any Mode of Operation by presenting their Proximity Card or PIN code to the controller.

Modes of Operation

The AC-F44 has 3 Modes of Operation:

1) Normal Mode. **Mode** ● **Door**
● Mode LED is green GREEN

Normal Mode is the default mode. In Normal Mode the door is locked until a Primary Code is presented to the controller. The controller can only be programmed in Normal Mode.

2) Bypass Mode. **Mode** ● **Door**
● Mode LED is orange ORANGE

In Bypass Mode, access to the premises is dependent on whether the controller's Lock Strike Relay is programmed for Fail Safe Operation or Fail Secure Operation.

When the Lock Strike Relay is programmed for Fail Secure Operation, the door is locked until the Star button is pressed.

When the Lock Strike Relay is programmed for Fail Safe Operation, the door is constantly unlocked.

In case of power failure, for security reasons when power is restored the controller will be in Normal Mode.

3) Secure Mode. **Mode** ● **Door**
● Mode LED is red RED

Only Secure and Master Users can access the premises during the Secured Mode.

A Secure User must enter their Primary and Secondary Codes to gain entry. After entering their Primary code the Door LED will flash green for 10 seconds, during which the Secondary Code must be entered. A Master User only needs to present their Proximity Cord or PIN code once to gain entry.

Changing the Modes of Operation

Changing from Normal Mode to Secure Mode:

The default factory setting for the Normal / Secure Code is 3838

1) Enter the 4-digit Normal / Secure Code

- Mode LED will flash red

2) Press the **"#"** key to confirm the Mode change.
- Mode LED is red

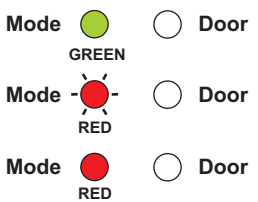

Changing from Secure Mode to Normal Mode:

The default factory setting for the Normal / Secure Code 3838

1) Enter the 4-digit Normal / Secure Code.

- Mode LED will flash green.

2) Press the **"#"** key to confirm the Mode change.
- Mode LED will turn green.

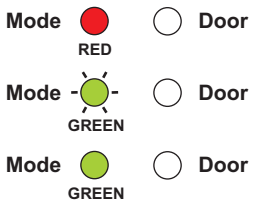

The Auxiliary Input of the AC-F44 can also be used to switch the mode of operation from Secure to Normal Mode and vice versa. Refer to "Setting the Auxiliary Mode" on Page 27.

Changing from Normal Mode to Bypass Mode:

By default there is no Normal / Bypass Code. The Normal / Bypass Code must first be programmed to use this function. Refer to page 24 to create / modify the Normal / Bypass Code.

1) Enter the 4 digit Normal / Bypass Code.

- Mode LED will flash orange

2) Press the **"#"** key to confirm the Mode change.
- Mode LED will turn orange

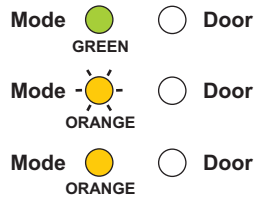

Changing from Bypass Mode to Normal Mode:

1) Enter the 4 digit Normal / Bypass Code.

- Mode LED will flash green

2) Press the **"#"** key to confirm the Mode change.
- Mode LED will turn green

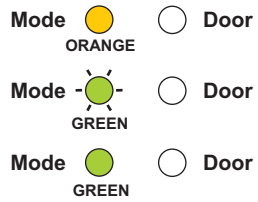

Auxiliary Input and Output

The AC-F44 auxiliary input and output can be configured in ten different modes of operation, for optimum usability in different applications.

For more information, refer to "Setting the Auxiliary Mode" on Page 27.

Request to Exit (REX) Button

The REX button must be located inside the premises to be secured and is used to open the door without the use of a proximity card or PIN code, it is usually located in a convenient location, e.g. Inside the door or at a receptionist's desk. The function of the REX button depends on whether the Lock Strike Relay is programmed for Fail Safe Operation or Fail Secure Operation. The door chime in the BL-D40 does not sound when the REX button is used to open the door.

1) Fail Secure Operation: From the moment the REX button is pressed, the door will be unlocked until the "Lock Strike Release Time" has passed. After this time, the door will be locked even if the REX button has not been released.

2) Fail Safe Operation: From the moment the REX button is pressed, the door will be unlocked until the REX button is released, plus the "Lock Strike Release Time". In this case the "Lock Strike Relay" only begins its count down once the REX button has been released. This feature is designed to keep the door open when used in conjunction with fire sytems.

Case and Back Tamper

If the case of the controller is opened or the controller is removed from the wall, a tamper event is triggered and a coded tamper signal is sent to a BL-D40, Supply, or other compatible device.

If the BL-D40 External Sounder receives a Tamper Event Signal, it will activate a Siren and a Strobe Light. The Siren time can be easily programmed in the AC-F44 from 0 to 9 minutes.

The tamper event can activate the Auxiliary Output if the controller is in Auxiliary Mode 3. Refer to "Setting the Auxiliary Mode" on Page 27.

Clearing a tamper event is done by entering a valid User Code.

BL-D40 External Sounder

The BL-D40 External Sounder is designed to operate indoors and installed within the premises to be secured. The Sounder can be powered by 12 to 24V DC power supply or by 16 to 24V AC from a transformer.

The BL-D40 is capable of emitting four different types of alerts both audible and visual; Bell, Door Chime, Siren, and Strobe Light.

1) The Bell always sounds when the controller's doorbell button is pressed.

2) The Door Chime can be programmed to sound whenever a valid code is entered.

3) The Siren can be programmed to sound when the case of the controller is tampered i.e. opened or when the controller is removed from the wall. The controller can also program the length of the Siren Time in the BL-D40.

The Controller communicates with the BL-D40 using a coded proprietary Rosslare communications protocol. This provides a more secure link between the Controller and the BL-D40.

If the BL-D40 receives any unrecognized codes on its communication line or communication between the controller and the BL-D40 are severed, the Strobe with flash repeatedly until the communication problem has been resolved.

Programming the AC-F44

Programming the AC-F44 is done solely via the unit's keypad driven Programming Menu System. To reach the Programming Menu System the AC-F44 must first be placed into Programming Mode. See "Entering Programming Mode" on Page 21 for more information.

During the AC-F44's manufacturing process certain codes and settings are pre-programmed. These settings are the called the "Default Factory Settings".

The table below shows the names of all the AC-F44 Menus. It also shows of all the AC-F44's default factory codes and settings.

Programming Menu

Factory Settings	Menu Description	Menu Number
2580	Change Open Code 1	1
0852	Change Auxiliary Code	2
1234	Change Program Code	3
3838	Change Normal / Secure Code	4
	Change Normal / Bypass Code	5
0004	Change Lock Strike Release Time	6
2004	Define Auxiliary Inputs / Outputs	
	Enroll Proximity Cards, PIN Code or both.	7
	Delete Proximity Cards Or PIN Code	8
	Code Assignment with Strike/Auxiliary	9
	Return to Default Factory Setting	0

You will find a complete description and instructions for each of the above menu items on the following pages.

Entering Programming Mode

1) Press the **"#"** key two times within 2 seconds.
- Mode LED will turn off
- Door LED will turn red

2) Enter your 4-digit Programming Code.

If the Programming Code is valid the door LED will turn green and the AC-F44 will be in Programming Mode.

Note:
- The AC-F44 must be in Normal Mode to enter the Programming Mode.
- The factory default Programming Code is 1234
- If a Programming Code is not entered within 5 seconds, the AC-F44 will return to Normal Mode.

Exiting Programming Mode

1) To exit the Programming Mode at any time:

Press the **"#"** key
- You will hear 1 long beeps.
- The Door LED will be off
- The Mode LED will turn green

This indicates that the AC-F44 has returned to Normal Mode.

2) Wrong entries may reset the controller back to Normal Mode.

3) While in Programming Mode if no key is pressed for 1 minute the AC-F44 will exit programming mode and return to Normal Mode.

4) While in enrolling user, deleting users, or code assignment modes, to exit Progrmming Mode press the "#" key two times.

Changing the Open Code

The Open Code is mainly used as a method to quickly test the Lock Strike Relay during installation.

The Default Factory Setting for the Open Code is 2580. When the first user is added to the controller, the default Open Code will automatically be deleted, ready for a new Open Code to be re-entered.

1) Enter Programming Mode — **Mode** ○ ● **Door** (GREEN)

2) Press **"1"** to enter **Menu 1** — **Mode** ● (RED) ● **Door** (GREEN)
- The Mode LED will turn red

3) Enter the new 4-digit code you wish to set as Open Code. — ? ? ? ?

4) System returns to Normal Mode — **Mode** ● (GREEN) ○ **Door**
- You will hear three beeps
- The Door LED will turn off
- The Mode LED will turn green

Note: - Open Code does not function in Secure Mode.
- Wrong entries: you will hear a long beep and the controller will return to Normal Mode.
- Code 0000 will erase and deactivate the Open Code.

Changing the Auxiliary Code

The Auxiliary Code is mainly used as a method to quickly test the Auxiliary Relay during installation.The Default Factory Setting for the Auxiliary Code is 0852.

For security reasons when the first user is added to the controller or the open code is changed, the default Auxiliary Code will automatically be deleted, ready for a Auxiliary Code to be assigned.

1) Enter Programming Mode — **Mode** ○ ● **Door** (GREEN)

2) Press **"2"** to enter **Menu 2** — **Mode** ● (ORANGE) ● **Door** (GREEN)
- The Mode LED will turn red

3) Enter the new 4-digit code you wish to set as Auxiliary Code. — ? ? ? ?

4) System returns to Normal Mode — **Mode** ● (GREEN) ○ **Door**
- You will hear three beeps
- The Door LED will turn off
- The Mode LED will turn green

Note: - Auxiliary Code does not work in Secure Mode.
- Auxiliary Code only works when the Auxiliary Mode is 0, 1, 8 or 9.
- Code 0000 will erase and deactivate the Auxiliary Code.

Changing the Programming Code

1) Enter Programming Mode — **Mode** ○ ● **Door** (GREEN)

2) Press **"3"** to enter **Menu 3** — **Mode** ● (GREEN) ● **Door** (GREEN)
- The Mode LED will turn green.

3) Enter the new 4-digit code you wish to set as Programming Code — ? ? ? ?

4) System returns to Normal Mode — **Mode** ● (GREEN) ○ **Door**
- You will hear three beeps
- The Door LED will turn off
- The Mode LED will turn green

Note: - Programming Code can not be erased, i.e. the code 0000 is not valid and will not erase the Programming Code.

Changing the Normal / Secure Code

1) Enter Programming Mode — **Mode** ○ ● **Door** (GREEN)

2) Press **"4"** to enter **Menu 4**
- The Mode LED will flash red

Mode - ● - ● **Door** (RED, GREEN)

3) Enter the new 4-digit code you wish to set as Normal / Secure Code

[?] [?] [?] [?]

4) System returns to Normal Mode
- You will hear three beeps
- The Door LED will turn off
- The Mode LED will turn green

Mode ● (GREEN) ○ **Door**

Note: - When the Auxiliary Mode is 1, 2, 3, or 4 the Auxiliary Input takes priority over the Normal / Secure Code.

Changing the Normal / Bypass Code and Door Chime Settings

The Normal / Bypass Code is also used to turn the Door Chime off and on. Chime only functions with BL-D40 External Sounder.

1) Enter Programming Mode — **Mode** ○ ● **Door** (GREEN)

2) Press **"5"** to enter **Menu 5**
- The Mode LED will flash orange.

Mode - ● - ● **Door** (ORANGE, GREEN)

3) Below is a list of the four different ways that the Normal / Bypass Code and Door Chime can be programmed.

a) Disable Bypass Mode - Disable Door Chime
b) Disable Bypass Mode - Enable Door Chime
c) Enable Bypass Mode - Disable Door Chime
d) Enable Bypass Mode - Enable Door Chime

a) Disable Bypass Code - Disable Door Chime

Enter the 4-digit code 0000 — [0] [0] [0] [0]

b) Disable Bypass Code - Enable Door Chime

Enter the 4-digit code 0001 — [0] [0] [0] [1]

c) Enable Bypass Code - Disable Door Chime

Enter any 4-digit code ending with 0 — [?] [?] [?] [0]

d) Enable Bypass Code - Enable Door Chime

Enter any 4-digit code not ending with 0 — [?] [?] [?] [~~0~~]

4) System returns to Normal Mode
- You will hear three beeps
- The Door LED will turn off
- The Mode LED will turn green

Mode ● (GREEN) ○ **Door**

Note: - The chime is only generated when the Lock Strike Relay is activated due to a valid code entry.

Setting Fail Safe/Secure Operation
Setting Tamper Siren Time
Setting the Lock Strike Release Time

The default factory setting is 0004.
The Tamper Siren feature requires the BL-D40 External Sounder.

1) Enter Programming Mode

2) Press **"6"** to enter **Menu 6**
- The Mode LED will flash green

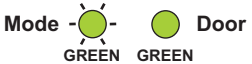

3) Construct the 4-digit code using the instructions below:

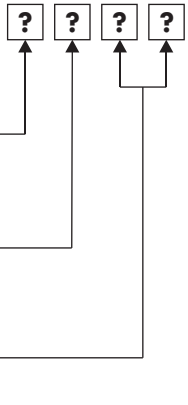

First Digit
For Fail Secure Operation the first digit should be **"0"**
For Fail Safe Operation the first digit should be **"1"**

Second Digit
Tamper Siren Time, enter any number from 0 to 9 minutes.

Third and Fourth Digit
Enter the number of seconds from (1 to 99 seconds) that you want the Lock Strike to be released.

For example 0 5 1 2 means Fail Secure Operation, with a 5 minute Tamper Siren Time, and a 12 second Lock Strike release time.

4) System returns to Normal Mode
- You will hear three beeps
- The Door LED will turn off.
- The Mode LED will turn green

Setting the Auxiliary Mode

The default auxiliary setting is 2004.

1) Enter Programming Mode

2) Press **"6"** to enter **Menu 6**
- The Mode LED will flash green

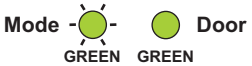

3) Construct the 4-digit code using the instructions below:

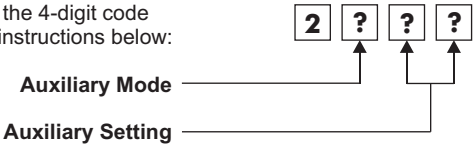

Auxiliary Mode
In addition to the Lock Strike Relay and Lock Strike REX, the AC-F44 features an Auxiliary Output Relay and an Auxiliary Input. The Auxiliary Mode defines the function of the Auxiliary Input and Output.

The Auxiliary Mode also determines if the Auxiliary Output Relay is set for Fail Safe or Fail Secure Operation.

Auxiliary Settings
Each of the Auxiliary Modes has a two digit setting that affects how the Auxiliary Mode functions.

4) System returns to Normal Mode
- You will hear three beeps
- The Door LED will turn off.
- The Mode LED will turn green

The Auxiliary Mode Quick Reference Table can be found on the next page. For a more detailed explanation on each auxiliary mode refer to the "Auxiliary Mode Reference guide" on Page 29.

Auxiliary Mode Quick Reference Table

Auxiliary Mode	Auxiliary Input Function	Auxiliary Output Activated On	Aux. Relay	Auxiliary Settings (All times and delays are in seconds)
0	REX-2	Valid Code or REX-2	N.O.	01 to 99 Aux. Relay Release Time 00 Aux. Relay Toggles
1	Normal / Secure	Valid Code	N.O.	01 to 99 Aux. Relay Release Time 00 Aux. Relay Toggles
2	Normal / Secure	Star Button	N.O.	01 to 99 Aux. Relay Release Time 00 Aux. Relay Toggles
3	Normal / Secure	Tamper Event	N.C.	01 to 99 Aux. Relay Release Time 00 Aux. Relay activated by Tamper
4	Normal / Secure	Direct Shunt	N.O.	00 to 99 Shunt Time
5	Door Monitor	Shunt	N.C.	00 to 99 Maximum Shunt Time
6	Door Monitor	Forced Door	N.C.	00 to 99 Forced Delay
7	Door Monitor	Door Ajar	N.C.	00 to 99 Ajar Delay
8	LED Ctrl - Red	Valid Code	N.O.	01 to 99 Aux. Relay Release Time 00 Aux. Relay Toggles
9	LED Ctrl - Green	Valid Code	N.O.	01 to 99 Aux. Relay Release Time 00 Aux. Relay Toggles

Auxiliary Mode Reference Guide

The following are brief descriptions of each of the AC-F44's auxiliary modes. To use these features refer to "Setting the Auxiliary Mode" on page 27.

AUXILIARY MODE 0

In auxiliary mode 0 the AC-F44 can function as a two door controller. The auxiliary relay should be attached to the lock on the second door. The auxiliary setting defines the door open time for the second door. The auxiliary input should be attached to the REX button for the second door.

AUXILIARY MODE 1

In auxiliary mode 1 the AC-F44 can function as a two door controller. The auxiliary relay should be attached to the lock on the second door. The auxiliary setting defines the door open time for the second door. The auxiliary input can switch the mode of operation of the controller between Normal and Secure Mode. By connecting a switch timer to the auxiliary input you can for example automatically switch the AC-F44 from Normal Mode during office hours to Secure mode after office hours.

AUXILIARY MODE 2

In auxiliary mode 2 the auxiliary relay can function as a general purpose timed switch that can be activated when the star button on the AC-F44 is pressed. The auxiliary setting defines how long the auxiliary relay should be activated. The auxiliary input can switch the mode of operation of the controller between Normal and Secure Mode. By connecting a switch timer to the auxiliary input you can for example automatically switch the AC-F44 from Normal Mode during office hours to Secure mode after office hours.

AUXILIARY MODE 3

In auxiliary mode 3 the auxiliary output is activated if the AC-F44 is tampered, i.e. the case tamper or back tamper is triggered. The auxiliary input can switch the mode of operation of the controller

between Normal and Secure Mode. By connecting a switch timer to the auxiliary input you can for example automatically switch the AC-F44 from Normal Mode during office hours to secure mode after office hours.

AUXILIARY MODE 4

In auxiliary mode 4 the AC-F44 is capable of shunting an alarm system's door sensor. The auxiliary output should be wired in parallel to the door sensor. When in use the auxiliary output is normally open and the door sensor functions normally. When a valid code is entered the auxiliary relay will shunt the door sensor for the duration of the shunt time as defined by the auxiliary setting. If the door is left open longer than the shunt time the alarm will be triggered.

AUXILIARY MODE 5

In auxiliary mode 5 the AC-F44 is capable of shunting an alarm system. In this mode the auxiliary input should be wired to the magnetic contact switch on the door. The auxiliary relay should be wired to the alarm system. Without a valid code entered the auxiliary relay will match the condition of the magnetic contact switch, if the door opens the auxiliary relay will open, if the door closes the auxiliary relay will close. When a valid code is entered a count down for maximum shunt time as defined in the auxiliary setting begins, if the door is not closed before the maximum shunt time, the alarm will be triggered.

AUXILIARY MODE 6

In auxiliary mode 6 the AC-F44 can trigger the auxiliary relay if it detects that the door has been forced. In this mode the auxiliary input should be wired to the magnetic contact switch on the door. The auxiliary relay should be wired to the alarm system. If the door is forced open the controller will wait for the forced door delay time and then activate the auxiliary relay. The auxiliary setting defines the forced door delay.

AUXILIARY MODE 7

In auxiliary mode 7 the AC-F44 can trigger the auxiliary relay if it detects that the door has been ajar too long. In this mode the auxiliary input should be wired to the magnetic contact switch on the door. The auxiliary relay should be wired to the alarm system. If the door is opened the controller will wait for the door ajar delay time, if the door does not close before the ajar delay time the controller will activate the auxiliary relay. The auxiliary setting defines the door ajar time.

If BL-D40 is connected and an ajar event occurs the BL-D40 will chime every few seconds for 1 minute or till the door is closed.

AUXILIARY MODE 8

In auxiliary mode 8 the AC-F44 can function as a two door controller and also provide LED Control functionality. The auxiliary relay should be attached to the lock on the second door. The auxiliary setting defines the door open time for the second door. The auxiliary input is used to control the LED. If the auxiliary input is open the Door LED will flash red, if the auxiliary input is closed the Door LED will flash green.

Note: This mode takes control of the Door LED. The Door LED will no longer activate when a valid code is entered or when in Secure Mode waiting for a Secondary Code to be entered.

AUXILIARY MODE 9

In auxiliary mode 9 the AC-F44 can function as a two door controller and also provide LED Control functionality. The auxiliary relay should be attached to the lock on the second door. The auxiliary setting defines the door open time for the second door. The auxiliary input is used to control the LED. If the auxiliary input is open the Door LED will flash green, if the auxiliary input is closed the Door LED will flash red.

Note: This mode takes control of the Door LED. The Door LED will no longer activate when a valid code is entered or when in Secure Mode waiting for a Secondary Code to be entered.

Enrolling Primary & Secondary Codes

Primary Codes

- Primary Codes can only be enrolled to an empty User Slot, i.e a slot where there is no existing Primary Code.
- Primary Codes must be unique, i.e. one users Primary Code may not be the same as another users Primary Code.
- Primary Codes cannot be the same as any system codes, such as the Normal / Secure Code or Open Code.
- Users who hold a Primary Code can gain entry only during Normal Mode.

Secondary Codes

- Secondary Codes can only be enrolled to User Slot that already has a Primary Code enrolled but no Secondary Code.
- Secondary Codes do not have to be unique, i.e. multiple users can all hold the same Secondary Code.
- Secondary Codes cannot be the same as any system codes, such as the Normal / Secure Code or Open Code.
- Users who hold Secondary Codes can gain entry in any Mode of Operation.

Enrolling Primary and Secondary Codes

There are two methods to enroll Primary and Secondary codes, the Standard Method and the Code Search Method.

A. The Standard Method is mainly used when the User Slot number for the user you wish to program is known. You can program both Primary and Secondary Codes using the Standard method. (See Enrolling Users with the Standard Method on Page 33)

B. The Code Search Method is mainly used when enrolling a users Secondary Code and the User Slot Code is unknown. The Code Search method only works if a users Primary Code is already enrolled but the Secondary Code is not. (See Enrolling Users with the Code Search Method on Page 34)

Enrolling Primary and Secondary Codes using the Standard Method

1) Enter Programming Mode

2) Press **"7"** to enter **Menu 7**
- The Door LED will turn orange

3) Enter the 3-digit User Slot number between 001 to 500 that you wish to enroll a Primary or Secondary code to.
For example, the User Slot 003 represents User #3.

4) a. If the selected slot has no Primary Code, the Mode LED will flash green, indicating that the controller is ready to accept a Primary Code.

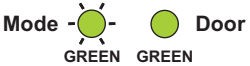

b. If the selected slot already has a Primary Code but no Secondary Code, the Mode LED will flash red, indicating that the controller is ready to accept a Secondary Code.

c. If the selected slot already has a Primary and Secondary Code, you will hear a long beep and the controller will return to Normal Mode.

5) Present a Proximity Card or enter the 4-digit PIN that you want to assign as the Primary or Secondary Code for this slot number.

If the Proximity Card or PIN that is entered is valid the Mode LED will stop flashing and then the controller is ready for you to enter the next 3 Digit slot number (refer to step 3) that you want to assign a code to, or press the **"#"** key to move to the next slot number (refer to step 4). If you do not wish to continue enrolling codes, press the **"#"** key two times and the controller will return to Normal Mode.

Enrolling Secondary Codes using the Code Search Method

The Code Search feature enables you to quickly enroll a Secondary Code to a user who's slot number is unknown but who's primary code is known.

1) Enter Programming Mode — **Mode** ○ ● **Door** (GREEN)

2) Press **"7"** to enter **Menu 7** — **Mode** ○ ● **Door** (ORANGE)
- The Door LED will turn orange

3) Enter the 3-digit User Slot number 000 — **0** **0** **0**

- The Door LED will flash orange — **Mode** ○ -●- **Door** (ORANGE)

The controller is now waiting for the Primary Code of the User you want to add a Secondary Code to.

.

4) Present the Proximity Card or enter the 4 Digit PIN Code of the Primary Code belonging to the user you want to add a Secondary Code to.

- The Mode LED will flash red — **Mode** -●- (RED) -●- **Door** (ORANGE)

If the Primary Code entered is not valid, you will hear a long beep and the AC-F44 will continue to wait for a valid Primary Code.

5) Present the Proximity Card or enter the 4-digit PIN Code to be used as the Secondary Code.

If the Secondary Code is valid the controller will beep three times and return to Normal Mode. If the Secondary Code is invalid the controller will make a long beep and then the AC-F44 will continue to wait for a valid Secondary code to be entered.

Deleting Primary & Secondary Codes

There are two methods to delete Primary and Secondary codes, the Standard Method and the Code Search Method.

When deleting a User Slot, both the Primary Code and the Secondary code are erased.

Deleting Primary and Secondary Codes using the Standard Method

1) Enter Programming Mode — **Mode** ○ ● **Door** (GREEN)

2) Press **"8"** to enter **Menu 8** — **Mode** ● (RED) ● **Door** (ORANGE)
- The Mode LED will turn red

3) Enter the 3-digit User Slot codes you wish to delete. — **?** **?** **?**

- The Mode LED will flash red Indicating the controller is waiting for the Programming Code to confirm the deletion. — **Mode** -●- (RED) ● **Door** (ORANGE)

If the User Slot is empty you will hear a long beep and the AC-F44 will return to Normal Mode

4) Enter your Programming Code to confirm the deletion. — **?** **?** **?** **?**

If the Programming Code is valid, you will hear three beeps and the AC-F44 will return to Normal Mode.

If the Programming Code is invalid, you will hear a long beep and the AC-F44 will return to Normal Mode.

Note: - It is recommended that a record be kept of added and deleted users so that it will be easier to keep track of which user slots are empty and which user slots are not.

Deleting Primary and Secondary Codes using the Code Search Method

1) Enter Programming Mode

Mode ○ ● **Door**
GREEN

2) Press **"8"** to enter **Menu 8**
- The Mode LED will turn red

Mode ● ● **Door**
RED ORANGE

3) Enter the 3-digit User Slot 000

0 0 0

- The Door LED will flash orange

Mode ● -◐- **Door**
RED ORANGE

The controller is now waiting for the Primary Code of the User you want to delete.

4) Present the Proximity Card or enter the 4-digit PIN Code of the Primary Code belonging to the user you want to delete.

? ? ? ?

- The Mode LED will flash red

Mode -◐- -◐- **Door**
RED ORANGE

5) Enter your Programming Code to confim the deletion.

? ? ? ?

If the Programming Code is valid, you will hear three beeps and the AC-F44 will return to Normal Mode.

If the Programming Code is invalid, you will hear a long beep and the AC-F44 will return to Normal Mode.

Note: - It is recommended that a record be kept of added and deleted users so that it will be easier to keep track of which user slots are empty and which user slots are not.

Lock Strike Relay and Auxiliary Relay Code Assignment

When a Primary Code is enrolled for any user, that user is assigned rights to activate the Lock Strike Relay when they present a valid code to the controller. The Code Assignment Menu allows you to assign whether the Lock Strike Relay and/or the Auxiliary Relay is activated when a user enters a valid code. There are two methods to Assign Codes, Standard Method and the Code Search Method.

Lock Strike Relay and Auxiliary Relay Code Assignment using the Standard Method

1) Enter Programming Mode

Mode ○ ● **Door**
GREEN

2) Press **"9"** to enter **Menu 9**
- The Mode LED will turn green
- The Door LED will turn orange.

Mode ● ● **Door**
GREEN ORANGE

3) Enter the 3-digit User Slot that you want to assign a code to.

? ? ?

- The Door LED will flash green

Mode -◐- ● **Door**
GREEN ORANGE

4) Enter the assignment digit for the current User Slot:

"1" assigns the Lock Strike Relay only
"2" assigns the Auxiliary Strike Relay only
"3" assigns the Lock Strike and Auxiliary Relay

- If the assignment code is valid the Mode LED will stop flashing.

Mode ● ● **Door**
GREEN ORANGE

The controller is now waiting for another slot number. Press the **"#"** key to go to the next slot or enter a new slot number, or if you do not wish to continue press the **"#"** key for two times and the controller will return to Normal Mode.

Lock Strike and Auxiliary Relay Code Assignment using the Code Search Method

1) Enter Programming Mode

2) Press **"9"** to enter **Menu 9**
- The Mode LED will turn green
- The Door LED will turn orange

3) Enter the 3-digit User Slot 000

- The Door LED will flash orange

The controller is now waiting for the Primary Code of the user you want to Code Assign

4) Present the Proximity Card or enter the 4-digit PIN Code of the Primary Code belonging to the user you want to assign a code to.

- The Mode LED will flash green

5) Enter the assignment digit for the current User Slot:

"1" assigns the Lock Strike Relay only
"2" assigns the Auxiliary Strike Relay only
"3" assigns the Lock Strike and Auxiliary Relay

If the assignment digit is valid, you will hear three beeps and then the controller will return to Normal Mode.

If the assignment digit is invalid, you will hear a long beep and the controller will wait for another assignment digit to be entered.

Return To Factory Default Settings

Warning:

You must be very careful before using this command! Doing so will erase the entire memory which includes all User and Special Codes, and return all codes to their factory defaut settings.

1) Enter Programming Mode

2) Press **"0"** to enter **Menu 0**
- The Mode LED will flash red
- The Door LED will flash red

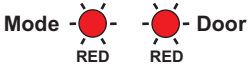

3) Enter your 4-digit Programming Code.

- If the Programming Code is valid, all memory will be erased, you will hear three beeps and the controller will return to Normal Mode
- If the Programming Code is invalid you will hear a long beep and the controller will return to Normal Mode without erasing the memory of the controller.

Replacing a lost Programming Code

Note: The AC-F44 must be in Normal Mode otherwise this will not work. Make sure that the Mode LED is green before proceeding.

1) Remove power from the AC-F44

2) Press the REX button

3) Apply power to the unit with REX button pressed

4) Release the REX button

5) You now have 15 seconds to program a new Programming Code into the unit using the initial default code 1234, before the controller reverts to the existing code.

Replacing a lost Normal / Secure Code

Note: The AC-F44 must be in Secure Mode otherwise this will not work. Make sure that the Mode LED is red before proceeding.

1) Remove power from the AC-F44

2) Press the REX Button

3) Apply power to the unit with REX button pressed.

4) Release the REX Button

5) You now have 15 seconds to program a new Normal / Secure code 3838 in order to return to Normal Mode, where you may enter programming mode to program a new Normal / Secure code.

Glossary

A

Access Control: Primarily refers to a device or set of devices controlling the entry of people traveling through a door or set of doors.

Ajar Delay: The time allowed for a door to be left open before sounding an alert and / or activating the Auxiliary Relay.

Amplitude Shift Keying (ASK): The type of data communications between the Proximity Card and the Proximity Reader.

ASK: An abbreviation of "Amplitude Shift Keying".

Auxiliary Input: The term used for the programmable input electrical signal from an external device such a Door Monitor switch or Auxiliary REX button.

Auxiliary Code: The four digit code used to activate the Auxiliary Output for testing purposes during installation.

Auxiliary Output: The term used for the Relay Output in the AC-F44 that may be programmed to activate upon different system events such as Tamper, Forced Door Event, Door Ajar, etc.

B

Back Tamper: The electronic tamper signal advising the controller that the controller has been removed from the wall.

Bypass Code: The four digit code used to change the Mode of Operation of the AC-F44 from Normal to Bypass Mode or vice versa.

Bypass Mode: A Mode of Operation where door access is not restricted to valid users. In this mode the door may be released by anyone pressing the star button.

C

Cards: See Proximity Cards

Case Tamper: The electronic tamper signal advising the controller that the case has been opened.

Code Assignment: The process of assigning which Output(s) (Lock Strike Relay and / or Auxiliary Relay) are to be activated when a valid code is entered.

D

Direct Shunt: The arrangement in which an external input (such as a door monitor) is connected directly to the Auxiliary Relay allowing the Auxiliary Output to be activated after the direct shunt delay elapses. This leaves the Auxiliary Input available for Normal / Secure mode toggle.

Default Factory Setting: The settings that the controller is preprogrammed with when the controller is manufactured.

Direct Shunt Delay: The delay time (user programmed) used in Direct Shunt (See Direct Shunt).

Door Bell: The alert sound activated when the door star button on the AC-F44 is pressed. (Requires the BL-D40 External Sounder)

Door Chime: The alert sound activated when the lock strike unlocks the door after a valid code has been presented. (Requires the BL-D40 External Sounder)

F

Fail Safe: The system setting in which a total power loss leaves the connected door unlocked.

Fail Secure: The system setting in which a total power loss leaves the connected door locked.

Forced Door: A door which has been physically opened without the access control device having released the lock.

Forced Door Time: The amount of time (user programmed) the controller waits in the event of a Forced Door before the Auxiliary Output is activated.

L

Lock Strike: Term used for the electronic or electromagnetic door lock used for locking or unlocking the door.

Lock Strike Release Time: The amount of time (user programmed) that the Lock Strike remains unlocked when a valid code is entered.

M

Master User: A user which has a Primary and Secondary Code which are the same, and can gain access in any Mode of Operation.

Mode of Operation: The state of operation of the controller. There are three "Modes": Normal Mode, Bypass Mode, and Secure Mode.

N

Normal Mode: The system setting (Mode of Operation) in which all valid users have access upon presenting a valid Proximity Card or PIN Code (Primary Code).

Normal / Bypass Code: The four digit code used to change the controllers Mode of Operation from Normal to Bypass Mode or vice versa.

Normal / Secure Code: The four digit code used to change the controllers Mode of Operation from Normal to Secure Mode or vice versa.

Normal User: A user who only has a Primary Code and can only gain access in Normal Mode.

Normally Closed: A relay output from the controller that is activated (closed circuit) under normal conditions.

Normally Open: A relay output from the controller that is de-activated (open circuit) under normal conditions.

O

Open Code: The four digit code used to activate the Lock Strike Relay for testing purposes during installation.

P

Primary Code: The unique code issued to enable access in Normal Mode. Users with only primary codes are Normal Users.

Programming Code: The four digit code required when entering programming mode, deleting users, and resetting the AC-F44 to its factory default settings.

Programming Mode: The mode used when programming the AC-F44's system settings.

Proximity Cards: A contactless (RFID) identification card each with unique code.

R

Relay: An electronically controlled switch used for providing an Open Circuit or Closed Circuit output to external devices.

REX: An abbreviation of "Request To Exit".

Request To Exit (REX): Refers to a button which can release the door from inside. Commonly located at the reception desk, or near a door as an emergency door release.

S

Secondary Code: An additional code issued to enable access in Secured Mode. Users with non-identical Primary and Secondary Codes are Secure Users. Users with identical Primary and Secondary Codes are Master Users.

Secure Mode: The system setting (Mode of Operation) in which only valid Secure and Master Users have access upon presenting a valid code.

Secure User: A user which has a Primary Code and Secondary Code that are non-identical, and can gain access in any Mode of Operation.

Shunt: The arrangement in which an external input (such as a door monitor) is connected to the Auxiliary Input, allowing the auxiliary output to be activated after the Shunt Delay elapses.

Shunt Delay: Is the delay time (user programmed) used in Shunt (See Shunt).

Strike: See Lock Strike

T

Tamper Siren: The alert sound activated when a Back Tamper or Case Tamper event occurs. (Requires the BL-D40 External Sounder)

Tamper Siren Time: The time (user programmed) that the Tamper Siren will sound when activated.

Limited Lifetime Warranty

ROSSLARE ENTERPRISES LIMITED"S (Rosslare) LIMITED LIFETIME WARRANTY is applicable worldwide. This warranty supersedes any other warranty. Rosslare's LIMITED LIFETIME WARRANTY is subject to the following conditions:

WARRANTY

Warranty of Rosslare's products extends to the original purchaser of the Rosslare product and is not transferable.

WARRANTY DURATION

Rosslare warrants this product against defects in material and/or workmanship for the life of the product from the date of original purchase to the original purchaser.

WARRANTY COVERAGE

Rosslare will repair or replace, at its option, any product which under normal conditions of use and service proves to be defective in material or workmanship. No charge will be made for labor or parts with respect to defects covered by this warranty, provided that the work is done by Rosslare or a Rosslare authorized service center. This warranty does not cover expenses incurred in the transportation, removal or reinstallation of the product, whether or not proven defective. Replacement or repairs furnished under this warranty are subject to the same terms and conditions of the original warranty.

EXCLUSIONS AND LIMITATIONS

Specifically excluded from this warranty are failures caused by abuse, neglect, misuse, improper operation, normal wear, accident, improper maintenance or modification. This warranty does not cover repair or replacement where normal use has exhausted the life of a part or instrument. Service life of the product is dependent upon the care it receives and the conditions under which it has to operate. In no event shall Rosslare be liable for incidental or consequential damages.

LIMITED LIFETIME WARRANTY TERMS

The terms of this warranty may not be varied by any person, whether or not purporting to represent or act on behalf of Rosslare. **This warranty represents the full extent of Rosslare's responsibility. Repair, replacement, or refund of the original purchase price, of the product is the exclusive remedy. This limited lifetime warranty is provided in lieu of all other warranties. All other warranties expressed or implied, including without limitation, implied warranties of merchantability and fitness for a particular purpose, are specifically excluded. In no event shall Rosslare be liable for damages in excess of the purchase price of the product, or for any other incidental, consequential or special damages, including but not limited to loss of use, loss of time, commercial loss, inconvenience, and loss of profits, arising out of the installation, use, or inability to use such product, to the fullest extent that any such loss or damage may be disclaimed by law.** This warranty shall become null and void in the event of a violation of the provisions of this limited warranty.

Technical Support

International:

Rosslare Enterprises Ltd.
905-912 Wing Fat Industrial Bldg.,
12 Wang Tai Road, Kowloon Bay,
Hong Kong.

http://www.rosslaresecurity.com

Tel: (852) 2795 5630
Fax: (852) 2795 1508
E-mail: info@rosslare.com.hk

United States and Canada:

Rosslare NAPDC
Suite 238, 200 East Howard Street,
Des Plaines, IL 60018
USA

http://www.rosslaresecurity.com

Tel: (866) 262 8633 (Toll-Free)
Tel: (847) 827 6330 (Direct)
Fax: (847) 827 6433
E-mail: support@rosslare.net