SIEMENS

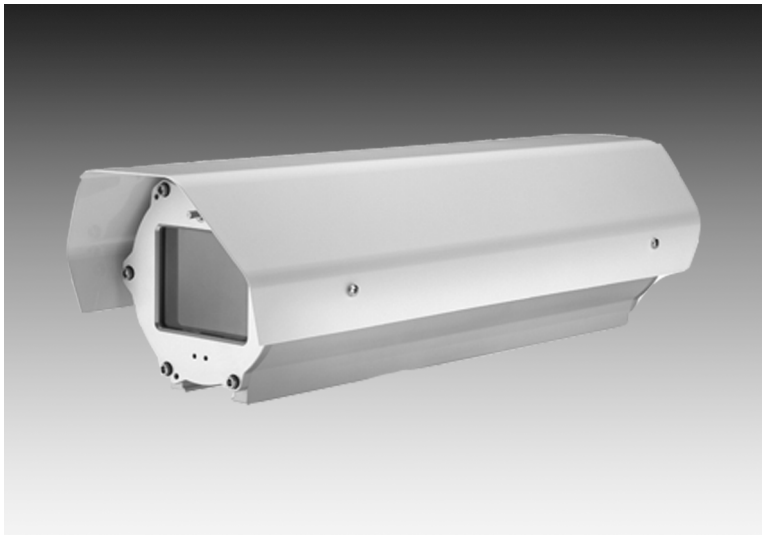

FH07C series

Phoenix™ Explosion-proof Camera Housing

FH07C-30
FH07C-30/L
FH07C-30/U
FH07C-40
FH07C-40/L
FH07C-40/U

- **Suitable for IIC gas group**
- **Suitable to use in hazardous dust conditions**
- **Wiper option**
- **Housings include demister and sunshield**
- **Each unit is individually pressure tested**
- **Factory pre-build option**
- **Housing is available in 2 different length and for 3 different power requirements**

The "Phoenix™ Explosion-Proof" equipment is ATEX-certified to be used in potentially hazardous areas where there is a risk of explosion because flammable gases, vapours, mists or dusts may be present. The housing is designed to prevent explosion by containing any heat, sparks, or flames generated. This prevents ignition of potentially explosive atmospheres or materials outside the equipment. The housing is ATEX-certified for use in IIC gas environments (includes acetylene and hydrogen). The housing is supplied complete with heater & sun shield. Additionally it can be factory-fitted with a wiper.
Siemens can deliver this housing as a factory pre-built version with Siemens or customer-supplied camera and lens.

Mechanical dimensions

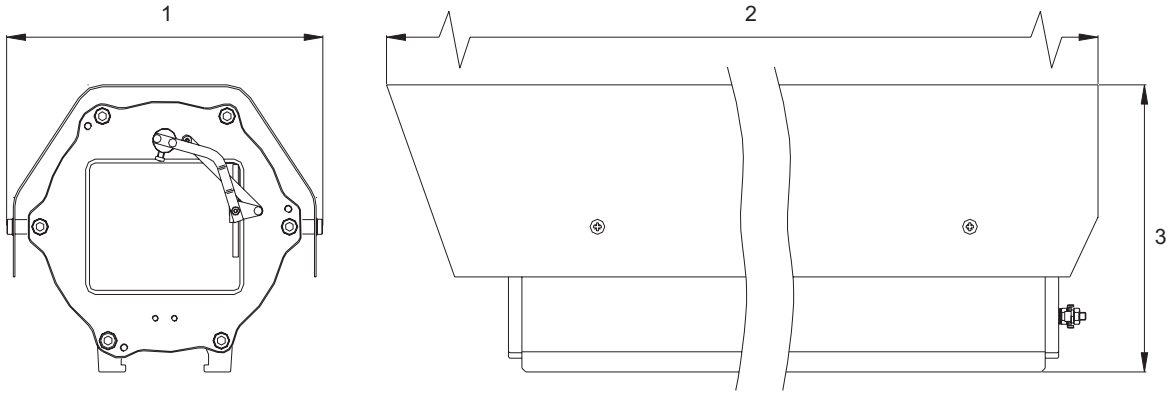

1	210 mm
2	545 mm (FH07C-30) / 675 mm (FH07C-40)
3	186 mm

Technical data

	FH07C-30	**FH07C-30/L**	**FH07C-30/U**	**FH07C-40**	**FH07C-40/L**	**FH07C-40/U**
Application	Hazardous (explosive) atmospheres (Gas Ex zone 1 / Dust Ex zone 21)					
Power requirements	230 V AC	24 V AC	110 V AC	230 V AC	24 V AC	110 V AC
Fuse	2 A	5 A	2 A	2 A	5 A	2 A
Dimensions (W x H x D)	210 x 186 x 545 mm	210 x 186 x 545 mm	210 x 186 x 545 mm	210 x 186 x 675 mm	210 x 186 x 675 mm	210 x 186 x 675 mm
Usable volume (W x H x D)	114 x 94 x 290 mm	114 x 94 x 290 mm	114 x 94 x 290 mm	114 x 94 x 420 mm	114 x 94 x 420 mm	114 x 94 x 420 mm
Cable entry	4 threaded holes (M20x1,5) for certified glands (1 x FH07C-CG included in delivery), fitted with blanking plugs					
Finish and colour	Body: Polyester powder coat RAL1020 (Yellow), Endplates: Clear anodised, Sunshield: White Polyester powder coat					
Construction	Body: machined aluminium extrusion; Front cap: machined aluminium with toughened glass window; Rear cap: machined aluminium					
Material	Aluminium extrusion (housing body), aluminium (end caps and sunshield)					
Heater/Demister	Thermostatically controlled to operate at a temperature ≤ 25 °C					
Heater rating	7 Watts nominal, PTC resistor heating element					
Ambient temperature, operating	-20 to +40 °C					
Protection rating	IP67 BS EN 60 529					
Weight	10.00 kg	10.00 kg	10.00 kg	11.80 kg	11.80 kg	11.80 kg

Details for ordering

Type	Part no	Designation	Weight
FH07C-40	S54561-C902-A1	FH07C-40 Explosion-proof camera housing ATEX IIC 230 V AC	11.8 kg
FH07C-40/U	S54561-C902-A2	FH07C-40/U Explosion-proof camera housing ATEX IIC 110 V AC	11.8 kg
FH07C-40/L	S54561-C902-A3	FH07C-40/L Explosion-proof camera housing ATEX IIC 24 V AC	11.8 kg
FH07C-30	S54561-C903-A1	FH07C-30 Explosion-proof camera housing ATEX IIC 230 V AC	10.0 kg
FH07C-30/U	S54561-C903-A2	FH07C-30/U Explosion-proof camera housing ATEX IIC 110 V AC	10.0 kg
FH07C-30/L	S54561-C903-A3	FH07C-30/L Explosion-proof camera housing ATEX IIC 24 V AC	10.0 kg

Accessories

Type	Part no	Designation	Weight
FH07W	S54561-B950-A1	FH07W Retro-fit kit for FH07 housing - 230 V AC, 4.6 VA	0.65 kg
FH07W/U	S54561-B950-A2	FH07W/U Retro-fit kit for FH07 housing - 110 V AC, 4.4 VA	0.65 kg
FH07W/L	S54561-B950-A3	FH07W/L Retro-fit kit for FH07 housing - 24 V AC, 4.8 VA	0.65 kg
FBP100	S54561-C971	Heavy duty bracket	8.00 kg
FH07C-CG	S54561-K970-A1	ATEX type C cable gland	

Issued by
Siemens Building Technologies
Fire & Security Products GmbH & Co. oHG
D-76181 Karlsruhe

www.buildingtechnologies.siemens.com

© 2009 Copyright by
Siemens Building Technologies

Data and design subject to change without notice.
Supply subject to availability.

Printed in the Federal Republic of Germany
on environment-friendly chlorine-free paper.

Document no. **A6V10080684**
Edition 06.03.2009